Price Electric Cooperative

A Touchstone Energy® Cooperative

New Service Guidelines

Contact Information

Price Electric Cooperative
Operations Department
W6803 Springs Dr · PO Box 110
Phillips, WI 54555
715.339.2155 │ 800-884-0881

715.339.2155
800.884.0881

W6803 Springs Drive ● PO Box 110
Phillips, WI 54555

www.PriceElectric.coop

PEC – Your Energy Solutions Cooperative

Price Electric Cooperative

A Touchstone Energy® Cooperative

Table of Contents

Section 1—General……..... 3
Purpose of Service Requirements……... 3
Member Wiring, Code Compliance and Inspection…… 4
Application for Service…… 5
Increased Loads……... 6
Continuity and Quality of Service……... 6
Resale of Energy……..... 6
Section 2—Types of Service and Voltages……... 7
Section 3—Line Extensions……..... 8
Overhead Conductor Clearances……..... 8
Section 4—Services …… 9
Point of Service……... 9
Service Location…….. 9
Temporary Service…….. 10
Relocation of Services……..... 10
Section 5—Cooperative Equipment on Member Premises….. 11
Sealing of All Equipment…… 11
Theft of Service……... 11
Section 6—Meter Locations……. 12
Types of Services……. 13
Section 7—Member Generating Equipment…… 42
Dual Fuel…….. 43
Approved Equipment List…… 45
New Service Membership Terms……. 47
New Service Checklist……. 48
Glossary…… 49

715.339.2155
800.884.0881

W6803 Springs Drive ● PO Box 110
Phillips, WI 54555

www.PriceElectric.coop

Price Electric Cooperative
A Touchstone Energy® Cooperative

Section 1—General

Purpose of Service Requirements

The following information, detailing the rules and regulations of the Price Electric Cooperative (Cooperative) concerning electric service installations, is published for the convenience of the Cooperative's members, their architects and contractors. These rules are in addition to the Wisconsin Administrative Code, the National Electrical Code, the National Electric Safety Code and any other regulations that may apply. The Cooperative reserves the right to revise these rules whenever changes in the article, legal requirements, or other circumstances make it advisable. These rules are intended for standard equipment installations. When, because of the physical limitations of the premises, it is impractical to follow them, the Cooperative shall be consulted for permissible modifications. The information contained herein does not specifically cover the requirements of the Cooperative's rate schedules, line extension policy, or general rules; the Cooperative should be consulted for information concerning these matters.

The Cooperative may refuse or discontinue service if a member does not comply with these rules, however, the member will first be notified and afforded a reasonable opportunity to comply. Service may be discontinued without prior notice when hazardous conditions exist on the member's premises.

715.339.2155
800.884.0881
W6803 Springs Drive ● PO Box 110
Phillips, WI 54555
www.PriceElectric.coop

Price Electric Cooperative
A Touchstone Energy® Cooperative

Member Wiring, Code Compliance and Inspection

All wiring shall be done in accordance with requirements of the Wisconsin State Electrical Code, the National Electrical Code, the Cooperative's rules and other local requirements which may apply.

The Cooperative will not inspect the member's wiring or equipment beyond the metering point or cabinet for compliance with the applicable codes.

In new wiring installations or when changes in existing wiring are made which require the removal of meters or the disconnection of service, the Cooperative shall not connect or resume service until the member's master electrician furnishes the Cooperative with a Wiring Compliance Statement showing proof of compliance with the Wisconsin State Electrical Code and the National Electrical Code.

Accounts that have been inactive for one (1) month shall require an updated Wiring Compliance Statement before the meter is installed unless prior Cooperative approval.

The Cooperative will not interpret the electrical code. Questions concerning code interpretation should be referred to the local or state electrical inspector. The contact information is:

State of Wisconsin
Department of Safety and Professional Services (DSPS)
4822 Madison Yards Way
Madison, WI 53707
Phone: (608)266-2112 or (877)617-1565

The Cooperative will inspect for compliance with its requirements and may refuse or discontinue electric service if its requirements are not complied with or if a hazardous condition exists.

Cooperative crews setting meters or connecting new services for single-phase one-family dwellings test for infinite resistance, back feed, shorted and grounded entrance cables at the meter socket load terminals. It is recommended that the service disconnect switch be left open to avoid the indication of connected load at the meter base.

Note: Cooperative crews will not enter a building to open or inspect the service disconnect switch.

715.339.2155
800.884.0881
W6803 Springs Drive ● PO Box 110
Phillips, WI 54555
www.PriceElectric.coop

Price Electric Cooperative
A Touchstone Energy® Cooperative

Application for Service

Guidelines for applying for service are outlined below.

1. Application for Membership
    a. Application for membership must be completed. All service extensions require that the electric service continue in force for five (5) years from the date service is made available by the Cooperative.
2. Membership Terms
    a. Membership terms document must be completed and signed.
3. Site Assessment
    a. A site assessment is necessary to determine the location of the service routing and termination point.
4. Construction Fees
    a. After the site visit, PEC personnel will estimate the service installation fees per PEC's Schedule Z. All fees must be paid prior to the installation of the service. All service extensions are subject to PEC Policy 522 Service Extension.
5. Easements and Permit Requirements
    a. Easements required from the applicant and from other parties shall be obtained by the applicant at no cost to the Cooperative. The Cooperative may prepare the easements for the applicant's signature. Any permits, inspections, surveys, etc., required before construction which require a fee, shall be paid for by the applicant requesting service.
6. Line Clearance (Tree & Brush Removal)
    a. Applicant is responsible for initial clearing of right-of-way on applicant's property as outlined in the Cooperative's Right-of-Way Clearing Guidelines, Methods, and Procedures, required for line construction.
7. Completion of Service Entrance Wiring
    a. The electrician or property owner (pursuant to Wisconsin State Electrical Code PSC 114.003 (2)) shall provide notification to the Cooperative of compliance with local and/or state electrical codes before a service is connected.
    b. **This will be in the form of a wiring compliance statement furnished by Price Electric Cooperative and completed by a master electrician doing the wiring. Services requiring state, local or Uniform Dwelling Code (UDC) inspections need documentation per those requirements before service will be connected.
8. Job Scheduling
    a. Prior to job scheduling by the Cooperative, the following items, where applicable, are required:
        i. All paperwork has been submitted and fees paid.
        ii. Line installation route has been cleared of any brush, stumps, dirt piles, and debris.

715.339.2155
800.884.0881
W6803 Springs Drive ● PO Box 110
Phillips, WI 54555
www.PriceElectric.coop

Increased Loads

In cases where member's load requirements have changed, necessitating a change of meter or increased transformer or conductor sizing, the Cooperative shall be given reasonable notice so that it may provide a meter, service drop, and transformer appropriately sized for the new loads. The Cooperative relies on the installation of properly sized equipment to mitigate delays, poor service, and potential damage to meters and transformers. The Cooperative may charge for the replacement cost of damaged Cooperative equipment.

Continuity and Quality of Service

The Cooperative will use reasonable care to provide an uninterrupted and regular supply of service; but shall not be liable for any loss, injury, or damage resulting from interruptions, deficiencies or imperfections of service not due to willful default or negligence on its part.

The Cooperative shall have the right to cause service to any member to be interrupted or limited at any time, without liability, by automatic devices or otherwise, when in the judgment of the Cooperative such interruption or limitation is necessary or desirable due to emergency conditions.

All motors, appliances or equipment connected to the Cooperative's system shall be so designed, installed, and operated so as not to cause interference to other Members' service equipment or to impede the Cooperative in maintaining proper system conditions.

It shall be the responsibility of the member to provide motor protection for under voltage, overcurrent, short circuit, and back feed.

The Cooperative may also curtail or temporarily interrupt the member's electric service to make repairs, replacements or changes to the Cooperative's facilities, either on or off the member's premises. The Cooperative will, whenever practical, give notice to members who might be seriously affected by such suspension or curtailment of service.

It is intended that the voltage provided to the member complies with the requirements of the Wisconsin State Electrical Code. This code allows voltage transients of an infrequent nature, which may adversely affect the operation of certain sensitive equipment. Prevention of undesirable operation of sensitive equipment caused by these transients is the responsibility of the member.

Resale of Energy

Services shall be for the members use only and may not be resold, re-metered or otherwise disposed of by the member to lessee, tenants or others, except with the consent of the Cooperative in accordance with the Cooperative's appropriate rate schedule permitting such use of service. This does not prohibit the installation of test or check meters for informational purposes.

715.339.2155
800.884.0881
W6803 Springs Drive ● PO Box 110
Phillips, WI 54555
www.PriceElectric.coop

Section 2—Types of Service and Voltages Available

The Cooperative furnishes 60-Hertz(cycles) alternating current, single and three-phase, at various voltages, but not all types of services are available in every locality.

The type of service available to the member is ordinarily determined by one or more of the following conditions:

1. Character and size of load to be served.
2. Temporary or permanent.
3. Underground or overhead service.

Types of Service and Nominal Voltage Furnished:

1. Single-phase, 120/240 volts, three wire
2. Three-phase, 277/480 or 120/208 volts, four-wire wye

Electric service at other voltages and capacities may be obtained under special circumstances.

Members' requests for additional services or services which do not conform to these rules shall be treated as "special facilities". The member is obligated, in accordance with the Cooperative extension rules, for any added cost involved. The Cooperative reserves the right to deny special facilities.

715.339.2155
800.884.0881
W6803 Springs Drive ● PO Box 110
Phillips, WI 54555
www.PriceElectric.coop

Price Electric Cooperative
A Touchstone Energy® Cooperative

Section 3—Line Extensions

Line Extensions on Private Property

Extensions of the Cooperative's distribution lines on to property of the member to be served will be made in accordance with the Cooperative's line extension policy, membership application, easement and requirements.

These requirements provide, among other things, that the Cooperative will own and be responsible for the maintenance and operation of such lines and shall have the right of access at all reasonable times for construction, reconstruction, tree trimming, maintenance inspection, rebuilding, outage restoration, maintenance and operation of lines and equipment with the right to remove poles and other equipment upon discontinuance of service.

Price Electric Cooperative will prepare all necessary easements along the route selected. The member requesting service shall be responsible for obtaining all signatures and all associated easement costs. Permanent survey stakes identifying property lines may be required by the Cooperative prior to installation of facilities.

When installed at member request, the member shall grant right-of-way satisfactory to the Cooperative for the installation and maintenance of the electric facilities. The right-of-way as designated by the Cooperative shall be cleared of trees and other obstructions by or at the expense of the member and in accordance with the Cooperative's Right-of-Way Clearing Guidelines, Methods and Procedures Handbook.

Line Extensions on Other than Private Property

The Cooperative shall obtain all licenses or permits that are necessary for right-of-way along the route which are not on private right-of-way. Examples are highway permits, railroad licenses, etc. Associated permit and license fees are the obligation of the member applying for service.

Overhead Conductor Clearances

Contact the Cooperative prior to new construction, repairs, or renovations to member-owned existing structures near or beneath overhead wires.

715.339.2155
800.884.0881
W6803 Springs Drive ● PO Box 110
Phillips, WI 54555
www.PriceElectric.coop

Section 4—Services

The Cooperative will extend service to members as promptly as practical, consistent with prevailing conditions and will always cooperate with contractors and members to provide proper service connections. It is requested that application for service be made as early as possible to permit the Cooperative to schedule its work. Where there is a question concerning the meaning or application of the Cooperative rules, unnecessary delays or expense may be avoided by consulting the Cooperative in advance of construction. Members, their architects, engineers, or contractors shall consult the Cooperative concerning entrance and meter locations; service voltage; and the type, phase, and voltage of motors and other equipment. Commercial services shall supply load calculation information for transformer, service, and metering selection. They shall consult the Cooperative concerning the installation of special circuits for separate metering or load control to meet the rate requirements of the Cooperative and permit adequate service.

Point of Service

The energy supplied by the Cooperative changes ownership at the point of service. This is the location where the member's wiring starts and the Cooperative's ends. The overhead point of service is where the Cooperative attaches its service drop to the building, structure or meter pole. The underground point of service is at the metering location that's either attached to a building, structure, meter pole, or at a meter pedestal.

The Cooperative wires terminate on the line side wire terminals of the meter socket unless on an underground service or at the service entrance on an overhead service. On a polyphase service, the point of service is at the metering equipment (current transformers –CTs), and services without CTs follow the aforementioned guidelines.

Service Location

The location of the member's service entrance shall in all cases be designated by the Cooperative. The Cooperative or its representatives shall make all connections to its lines, and in no case shall these connections be made by other than Cooperative representatives. To avoid misunderstanding and additional expense, the Cooperative shall be consulted concerning all new service connections.

No new service will be connected without a means of an external disconnect.

715.339.2155
800.884.0881
W6803 Springs Drive ● PO Box 110
Phillips, WI 54555
www.PriceElectric.coop

Temporary Service

Temporary service structures shall be adequately supported and of a sufficient height to permit compliance with required code clearances. The Cooperative will allow construction of a 200-amp maximum temporary service, upon request. The temporary service will be installed as close as practical to the nearest structure or within ten feet of a pad-mounted transformer, and for a period not to exceed twelve months from connected date.

The structure, including bracing, shall be clear of the underground service trench by a minimum of four feet. Applicant shall pay, in advance of construction, a temporary service fee, as per Rate Tariff Schedule T.

Relocation of Services

Any changes requested by a member at the point of service termination or removal and reinstallation or service conductors will be billed to the member.

715.339.2155
800.884.0881
W6803 Springs Drive ● PO Box 110
Phillips, WI 54555
www.PriceElectric.coop

Section 5—Cooperative Equipment on Member Premises

The Cooperative shall have the right to install, inspect and maintain its equipment on the member's premises as is necessary to furnish proper service. All such equipment shall remain Cooperative property, and the Cooperative shall have the right to remove it upon discontinuation of service. The member will allow inspection of Cooperative equipment within member equipment, such as, but not limited to, the meter base or current transformer. The member shall be responsible for damages and losses resulting from interference or tampering with such equipment caused or permitted by the member. If the Cooperative equipment is interfered with or damaged, the Cooperative may require the member to change his wiring, at his own expense, to permit the installation of other Cooperative equipment or to permit the relocation of Cooperative equipment to avoid further interference or damage.

Sealing of Equipment

Meters and all associated metering equipment, service termination boxes, wire raceway, and service entrance switches containing unmetered conductors are sealed by the Cooperative. This equipment must be designed with provisions for seals or locks as specified by the Cooperative. Cooperative management may grant permission to a master electrician remove a meter seal for maintenance of member equipment.

Unauthorized removing of Cooperative seals is unlawful and may result in billing for the investigation and replacement of the seal, as well as criminal prosecution.

Theft of Service

The Cooperative will investigate the possibility of theft of service whenever tampering with meter seals, meters, service conductors, and service connections is reported or detected. Only Cooperative authorized and qualified persons are permitted to make connections to Cooperative lines.

If the investigation determines that electricity is being diverted, the service may be disconnected.

Prior to restoration of service the member's service entrance equipment shall be locked or sealed in accordance with Cooperative requirements and satisfactory arrangements will have been made for payment of the estimated amount of unmetered electricity.

Theft of service may result in criminal prosecution.

715.339.2155
800.884.0881
W6803 Springs Drive ● PO Box 110
Phillips, WI 54555
www.PriceElectric.coop

Price Electric Cooperative
A Touchstone Energy® Cooperative

Section 6—Meter Locations

Members shall provide a suitable location for meters and associated equipment determined by and without charge to the Cooperative.

- Meters shall be installed in an accessible location to enable them to be safely read, inspected and tested at reasonable times with a minimum of inconvenience to the member and Cooperative.
- Multiple meter installations served from a single entrance shall be grouped at a location approved by the Cooperative.
- All single-phase and polyphase meter installations shall be located outside.
- Meters shall not be installed in patio, porch, deck or carport areas or areas likely to be enclosed in the future.
- Meter bases and meter shall not be covered by any material. (i.e. siding, cabinet, etc.)
- At earth-burmed buildings that do not have an exposed side suitable for the meter location, the service shall be terminated at a meter pedestal.
- Meters shall not be installed on mobile homes.
- The meter location shall be on a solid structure free from vibration and possible mechanical damage.

The member shall be responsible for providing protection for the meter(s) from damage caused by falling ice, snow or other objects. In locations where the meter is not protected by roof overhang, the member shall provide a protective shield. The clear space in front of or around meter bases and instrument transformer cabinets shall be maintained at a minimum of 4 feet horizontal and 6 feet 6 inches vertical clearance. Two feet of horizontal clearance on either side shall also be provided.

If changes are made to the member's premises making the existing meter location unsafe or inaccessible for reading and testing, the member shall be required to make changes so that the meter may be located to comply with these rules. Failure of the member to correct the unsafe or inaccessible concerns within a reasonable length of time after written notification shall be considered as noncompliance with these rules. The Cooperative reserves the right to discontinue electric service until the member has changed the unsafe or inaccessible as outlined above.

715.339.2155
800.884.0881
W6803 Springs Drive ● PO Box 110
Phillips, WI 54555
www.PriceElectric.coop

Types of Services

200-320 Amp Underground Service Free Standing Meter Pedestal with Main Breaker

1. The Cooperative shall furnish and install the line conductors. Where the Cooperative's wires will be covered by concrete or blacktop, the member shall provide conduit to extend at least 3 feet beyond the edge of the concrete or blacktop. Adequate conduit will be determined by the Cooperative and the conduit and trench must be inspected by the Cooperative prior to backfilling. Failure to do so could cause complications associated with the service installation and/or additional expense.

2. The member has the option to purchase a Cooperative-approved 200–320-amp meter pedestal with main breaker from the Cooperative or independently. If purchased from the Cooperative, the Cooperative will install the pedestal, at the member's expense. If purchased elsewhere, the member is responsible for installation of the pedestal to the Cooperative's specifications.
    a. Pedestal style meter sockets shall be required for underground to underground 200–320-amp installations. This includes up to four-meter positions.
    b. Meter pedestals shall be adequately supported to maintain the meter socket in a level and plumb position.

3. On group installations, each meter socket and service disconnect switch shall be permanently marked identifying the location to be served. The location being served shall be identified in the same manner.

4. If the member purchases a Cooperative approved 200–320-amp meter pedestal with main breaker from the Cooperative, the Cooperative-approved ground rods will be provided. If the meter pedestal is purchased independently, the rods must be as well. The rods shall be two 5/8" copper clad steel ground rods and approved clamps. Ground rods and grounding conductors shall not be installed in front of the meter pedestal or within 2 feet of the underground cable route. If the pedestal and rods are both purchased from the Cooperative, the Cooperative will install the rods and clamps. If purchased elsewhere, the member is responsible for installation to Cooperative specifications.

5. The grounding electrode conductor from the ground rods shall not be spliced or terminated in the meter socket or utility portion of the pedestal. The top of the ground rods should be at least 12" below grade level. Ground wire shall be minimum 4 AWG copper wire.

6. Member shall furnish and install load conductors between the meter pedestal and the breaker panel.

7. Adequate space shall be provided for removal of the meter pedestal cover when concrete or blacktop covers the area in front of the meter pedestal.

8. Wiring shall be installed in compliance with state electrical code and any local requirement.

715.339.2155
800.884.0881
W6803 Springs Drive ● PO Box 110
Phillips, WI 54555
www.PriceElectric.coop

Price Electric Cooperative

A Touchstone Energy® Cooperative

200-320 Amp Underground Service Meter Pedestal with Main Breaker

715.339.2155
800.884.0881

W6803 Springs Drive ● PO Box 110
Phillips, WI 54555

www.PriceElectric.coop

PEC – Your Energy Solutions Cooperative

Price Electric Cooperative

A Touchstone Energy® Cooperative

200-320 Amp Underground Service Meter Pedestal with Main Breaker

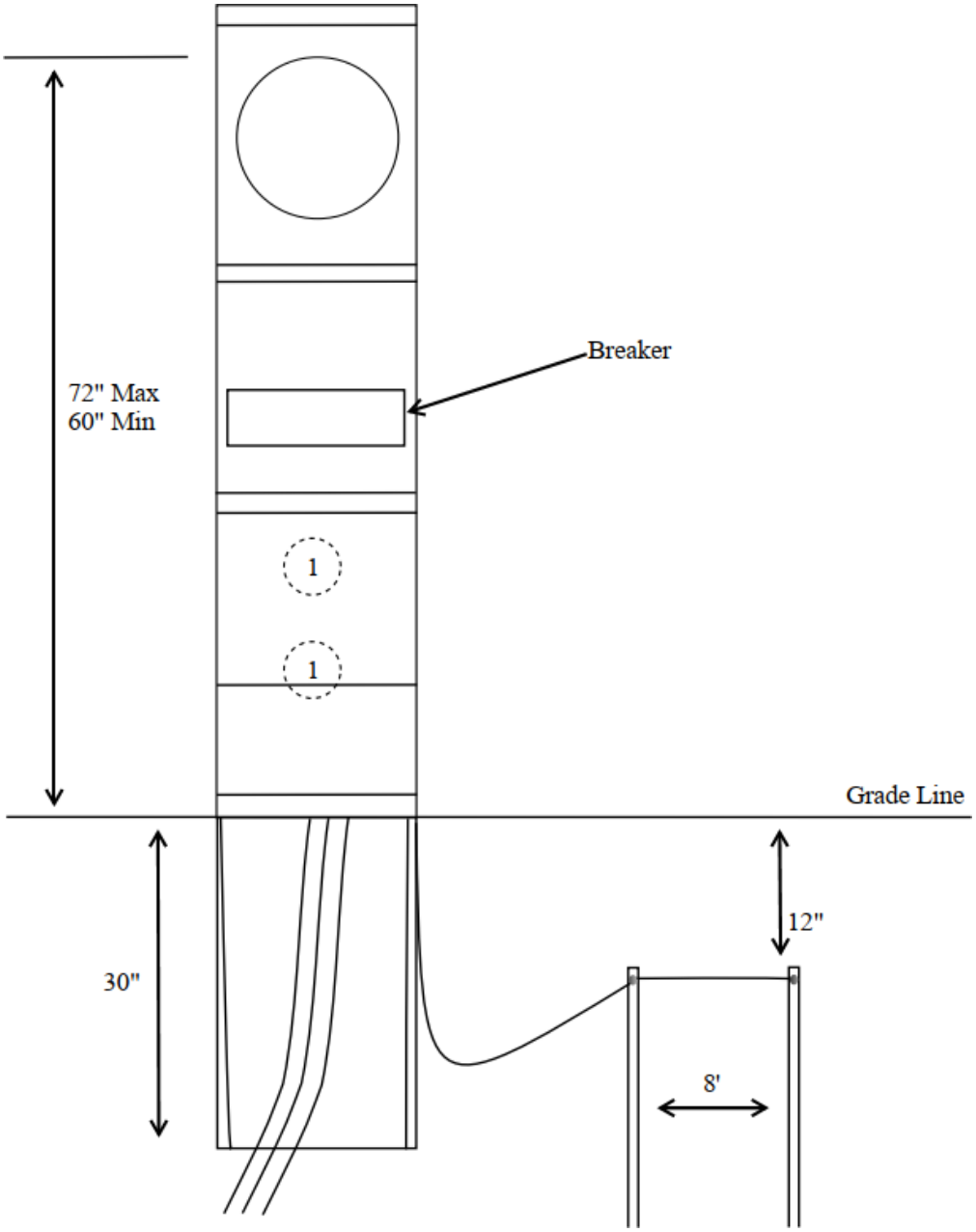

*Image is not to scale

715.339.2155
800.884.0881

W6803 Springs Drive ● PO Box 110
Phillips, WI 54555

www.PriceElectric.coop

Price Electric Cooperative

A Touchstone Energy® Cooperative

200-320 Amp Overhead Service on Building/Overhead Pipe Mast

1. The member has the option to purchase a Cooperative-approved 200–320-amp meter base with main breaker independently. The member is responsible for installation to Cooperative's specifications.
2. Cooperative shall furnish and install conductors to terminate at service entrance.
3. Member shall furnish and install galvanized steel 2" rigid conduit, complete with weatherhead, straps, conductors, and install guy wires if required.
    a. Maximum height allowed above the roof is 24"-36" for un-guyed pipe masts.
    b. Guy wires are required for pipe masts from 36"-60".
4. Member shall furnish and install service entrance conductors, load conductors and connectors.
5. Member shall furnish and install a disconnecting means, which shall be located on the load side of the meter base, on the exterior of the structure.
6. Member shall furnish and install two 5/8" x 8'copperclad steel ground rods with approved clamps. The top of rods shall be at least 12" below grade level.
7. The grounding electrode conductor from the ground rods shall not be spliced or terminated in the meter socket or utility portion of the pedestal. Ground wire shall be minimum 4 AWG copper wire.
8. Wiring shall be installed in compliance with the state electrical code, NEC, and any local requirements.

715.339.2155
800.884.0881

W6803 Springs Drive ● PO Box 110
Phillips, WI 54555

www.PriceElectric.coop

Price Electric Cooperative

A Touchstone Energy® Cooperative

200-320 Amp Overhead Service on Building/Overhead Pipe Mast

715.339.2155
800.884.0881

W6803 Springs Drive ● PO Box 110
Phillips, WI 54555

www.PriceElectric.coop

Price Electric Cooperative

A Touchstone Energy® Cooperative

200-320 Amp Overhead Service on Building/Overhead Pipe Mast

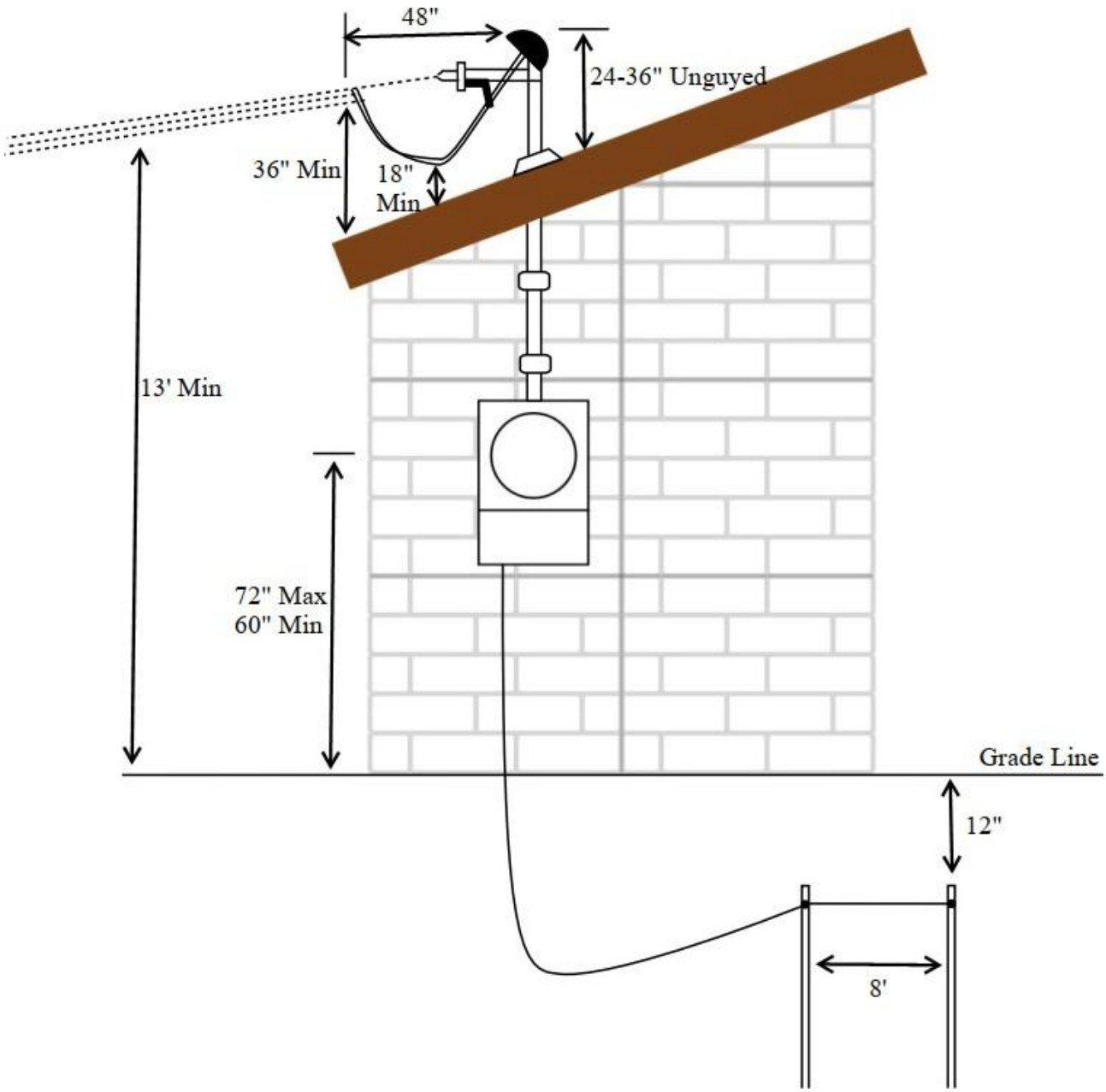

*Image is not to scale

715.339.2155
800.884.0881

W6803 Springs Drive ● PO Box 110
Phillips, WI 54555

www.PriceElectric.coop

PEC – Your Energy Solutions Cooperative

Price Electric Cooperative

A Touchstone Energy® Cooperative

200-320 Amp Overhead Gable End of House Service

1. The member has the option to purchase a Cooperative-approved 200–320-amp meter base with main breaker independently. The member is responsible for installation to Cooperative's specifications.
2. Cooperative shall furnish and install conductors to terminate at gable end of house. Member responsible for acceptable placement to meet required clearances for Cooperative to attach service.
3. Cooperative shall furnish and install conductors to terminate at service entrance.
4. Member shall furnish and install load side conductors.
5. Member shall furnish and install 2" rigid galvanized steel or Schedule 40 PVC, complete with weather heads, straps, and conductors.
6. Member shall furnish and install a disconnecting means, which shall be located on the load side of the meter base, on exterior of structure.
7. The member shall furnish and install, two 5/8" X 8' copper clad steel ground rods with approved clamps. The top of rods shall be at least 12" below grade level.
8. The grounding electrode conductor from the ground rods shall not be spliced or terminated in the meter socket or utility portion of the pedestal. The top of the ground rods should be at least 12" below grade level. Ground wire shall be minimum 4 AWG copper wire.
9. Wiring shall be installed in compliance with the state electrical code and any local requirements.

715.339.2155
800.884.0881

W6803 Springs Drive ● PO Box 110
Phillips, WI 54555

www.PriceElectric.coop

Price Electric Cooperative

A Touchstone Energy® Cooperative

200-320 Amp Overhead Gable End of House Service

715.339.2155
800.884.0881

W6803 Springs Drive ● PO Box 110
Phillips, WI 54555

www.PriceElectric.coop

PEC – Your Energy Solutions Cooperative

Price Electric Cooperative

A Touchstone Energy® Cooperative

200-320 Amp Overhead Gable End of House Service

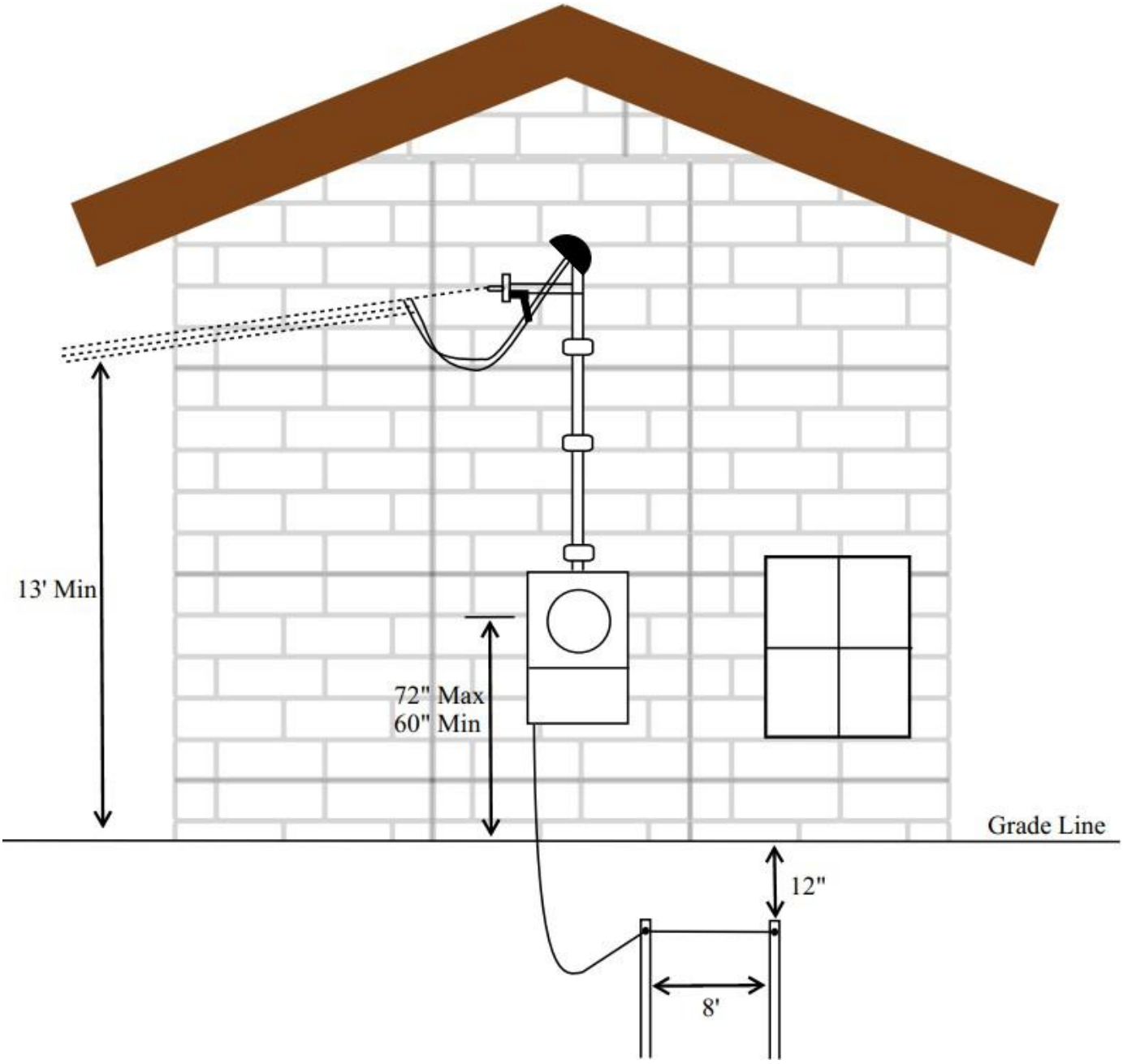

*Image is not to scale

715.339.2155
800.884.0881

W6803 Springs Drive ● PO Box 110
Phillips, WI 54555

www.PriceElectric.coop

PEC – Your Energy Solutions Cooperative

200-320 Amp Overhead to Underground Service, Pole Mounted

1. The Cooperative shall furnish and install, at the expense of the member, a minimum 30-foot pole.

2. Cooperative shall furnish and install conductors to terminate at meter pole.

3. Cooperative shall furnish and install connectors to connect the Cooperative's conductors to the member's conductors.

4. The member has the option to purchase a Cooperative-approved 200–320-amp meter base with main breaker independently. The member is responsible for installation to Cooperative's specifications.

5. Member shall furnish and install line side conductors within 2" minimum Schedule 40 PVC conduit and weatherhead.

6. Member shall furnish and install a disconnecting means, which shall be located on the load side of the meter base.

7. Member shall furnish and install two 5/8" x 8'copperclad steel ground rods with approved clamps. The top of rods shall be at least 12" below grade level.

8. The grounding electrode conductor from the ground rods shall not be spliced or terminated in the meter socket or utility portion of the pedestal. The top of the ground rods should be at least 12" below grade level. Ground wire shall be minimum 4 AWG copper wire.

9. Wiring shall be installed in compliance with the state electrical code and any local requirements.

715.339.2155
800.884.0881
W6803 Springs Drive ● PO Box 110
Phillips, WI 54555
www.PriceElectric.coop

Price Electric Cooperative

A Touchstone Energy® Cooperative

200-320 Amp Overhead to Underground Service, Pole Mounted

715.339.2155
800.884.0881

W6803 Springs Drive ● PO Box 110
Phillips, WI 54555

www.PriceElectric.coop

Price Electric Cooperative

A Touchstone Energy® Cooperative

200-320 Amp Overhead to Underground Service, Pole Mounted

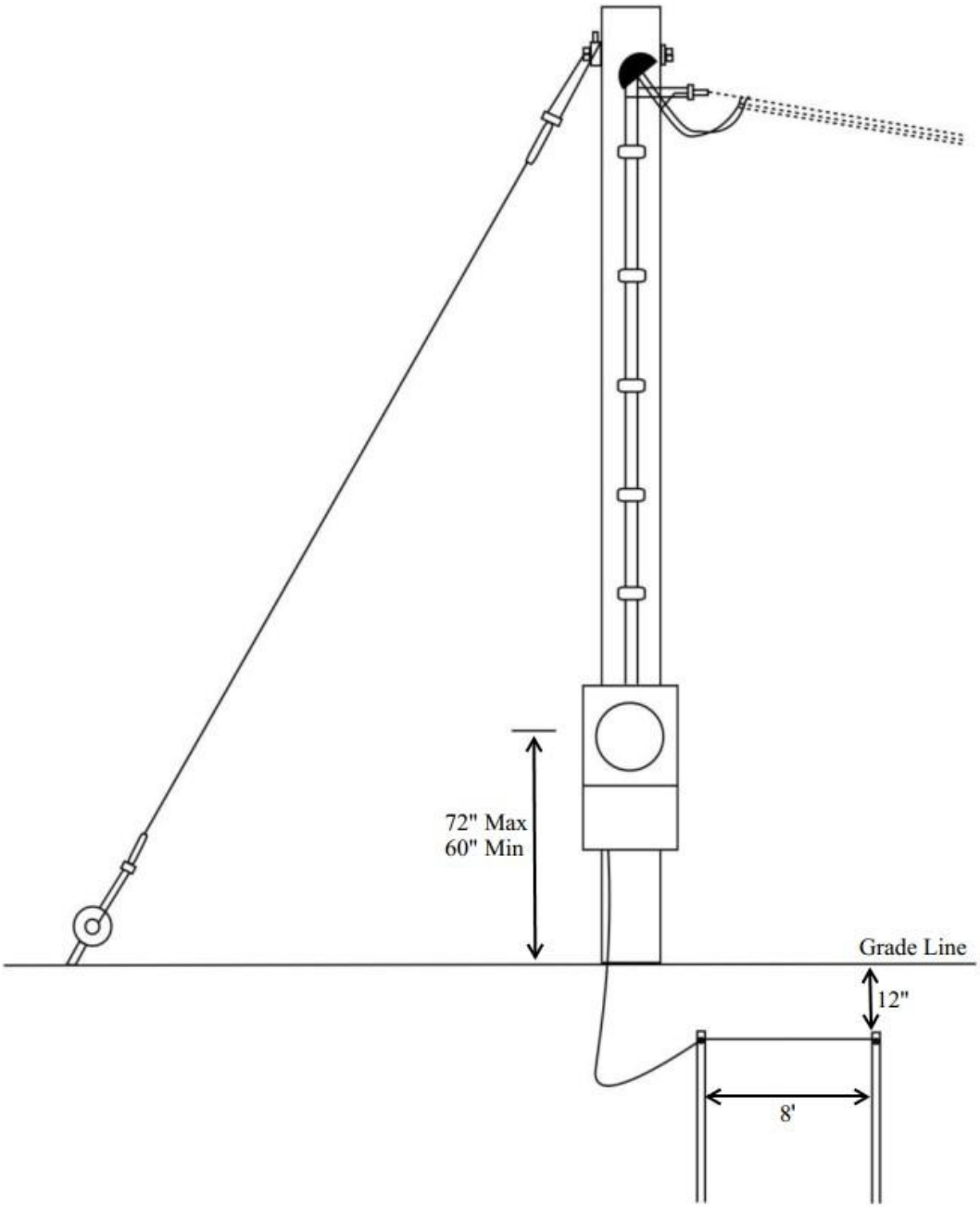

*Image is not to scale

715.339.2155
800.884.0881

W6803 Springs Drive ● PO Box 110
Phillips, WI 54555

www.PriceElectric.coop

PEC – Your Energy Solutions Cooperative

Price Electric Cooperative

A Touchstone Energy® Cooperative

200-320 Amp Underground Structure-Mounted Meter Base

*Requires Prior Approval

The Cooperative shall furnish and install the line conductors. Where the Cooperative's wires will be covered by concrete or blacktop, the member shall provide conduit to extend at least 3 feet beyond the edge of the concrete or blacktop.

The adequate size and type of conduit will be determined by the Cooperative and the conduit and trench must be inspected by the Cooperative prior to backfilling. Failure to do so could cause complications associated with the service installation and/or additional expense.

1. The member has the option to purchase a Cooperative-approved 200–320-amp meter base with main breaker independently. The member is responsible for installation to Cooperative's specifications.
2. Member shall furnish and install load conductors between the meter base and the disconnecting means, on the exterior of the structure.
3. The rods shall be two 5/8" copper clad steel ground rods and approved clamps. Ground rods and grounding conductors shall not be installed in front of the meter pedestal or within 2 feet of the underground cable route.
4. The grounding electrode conductor from the ground rods shall not be spliced or terminated in the meter socket or utility portion of the pedestal. The top of the ground rods should be at least 12" below grade level. Ground wire shall be minimum 4 AWG copper wire.
5. Adequate space shall be provided for removal of the meter pedestal cover when concrete or blacktop covers the area in front of the meter pedestal.
6. A PVC slip joint will be installed on the lineside of the service installation.
7. No meter base shall be installed under any windows.
8. Wiring shall be installed in compliance with the state electrical code and any local requirements.

715.339.2155
800.884.0881

W6803 Springs Drive ● PO Box 110
Phillips, WI 54555

www.PriceElectric.coop

Price Electric Cooperative

A Touchstone Energy® Cooperative

200-320 Amp Underground Structure-Mounted Meter Base

715.339.2155
800.884.0881

W6803 Springs Drive ● PO Box 110
Phillips, WI 54555

www.PriceElectric.coop

Price Electric Cooperative

A Touchstone Energy® Cooperative

200-320 Amp Underground Structure-Mounted Meter Base

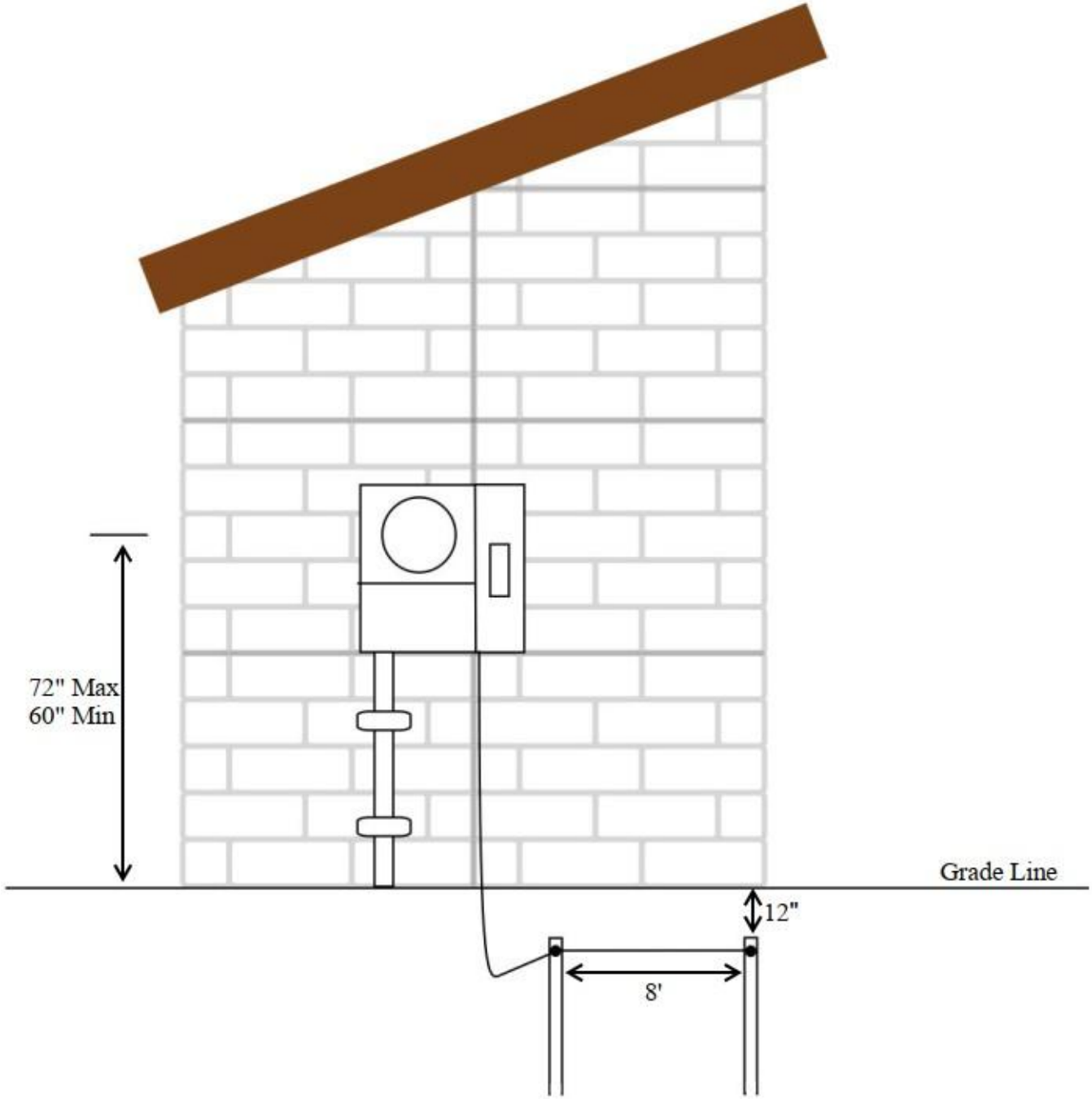

*Image is not to scale

715.339.2155
800.884.0881

W6803 Springs Drive ● PO Box 110
Phillips, WI 54555

www.PriceElectric.coop

PEC – Your Energy Solutions Cooperative

200-320 Amp Underground Structure, Mounted Meter Pedestal

The Cooperative shall furnish and install the line conductors. Where the Cooperative's wires will be covered by concrete or blacktop, the member shall provide conduit to extend at least 3 feet beyond the edge of the concrete or blacktop.

Adequate conduit will be determined by the Cooperative and the conduit and trench must be inspected by the Cooperative prior to backfilling. Failure to do so could cause complications associated with the service installation or additional expense.

1. The member has the option to purchase a Cooperative-approved 200-amp meter pedestal with main breaker independently. The member is responsible for installation to Cooperative's specifications.
2. Member shall furnish and install load conductors between the meter pedestal and the disconnecting means, on the exterior of the structure.
3. The rods shall be two 5/8" copper clad steel ground rods and approved clamps. Ground rods and grounding conductors shall not be installed in front of the meter pedestal or within 2 feet of the underground cable route.
4. The grounding electrode conductor from the ground rods shall not be spliced or terminated in the meter socket or utility portion of the pedestal. The top of the ground rods should be at least 12" below grade level. Ground wire shall be minimum 4 AWG copper wire.
5. Adequate space shall be provided for removal of the meter pedestal cover when concrete or blacktop covers the area in front of the meter pedestal.
6. No meter base shall be installed under any windows.
7. Wiring shall be installed in compliance with state electrical code and any local requirement.

715.339.2155
800.884.0881
W6803 Springs Drive ● PO Box 110
Phillips, WI 54555
www.PriceElectric.coop

Price Electric Cooperative

A Touchstone Energy® Cooperative

200-320 Amp Underground Structure, Mounted Meter Pedestal

715.339.2155
800.884.0881

W6803 Springs Drive ● PO Box 110
Phillips, WI 54555

www.PriceElectric.coop

PEC – Your Energy Solutions Cooperative

Price Electric Cooperative

A Touchstone Energy® Cooperative

200-320 Amp Underground Structure, Mounted Meter Pedestal

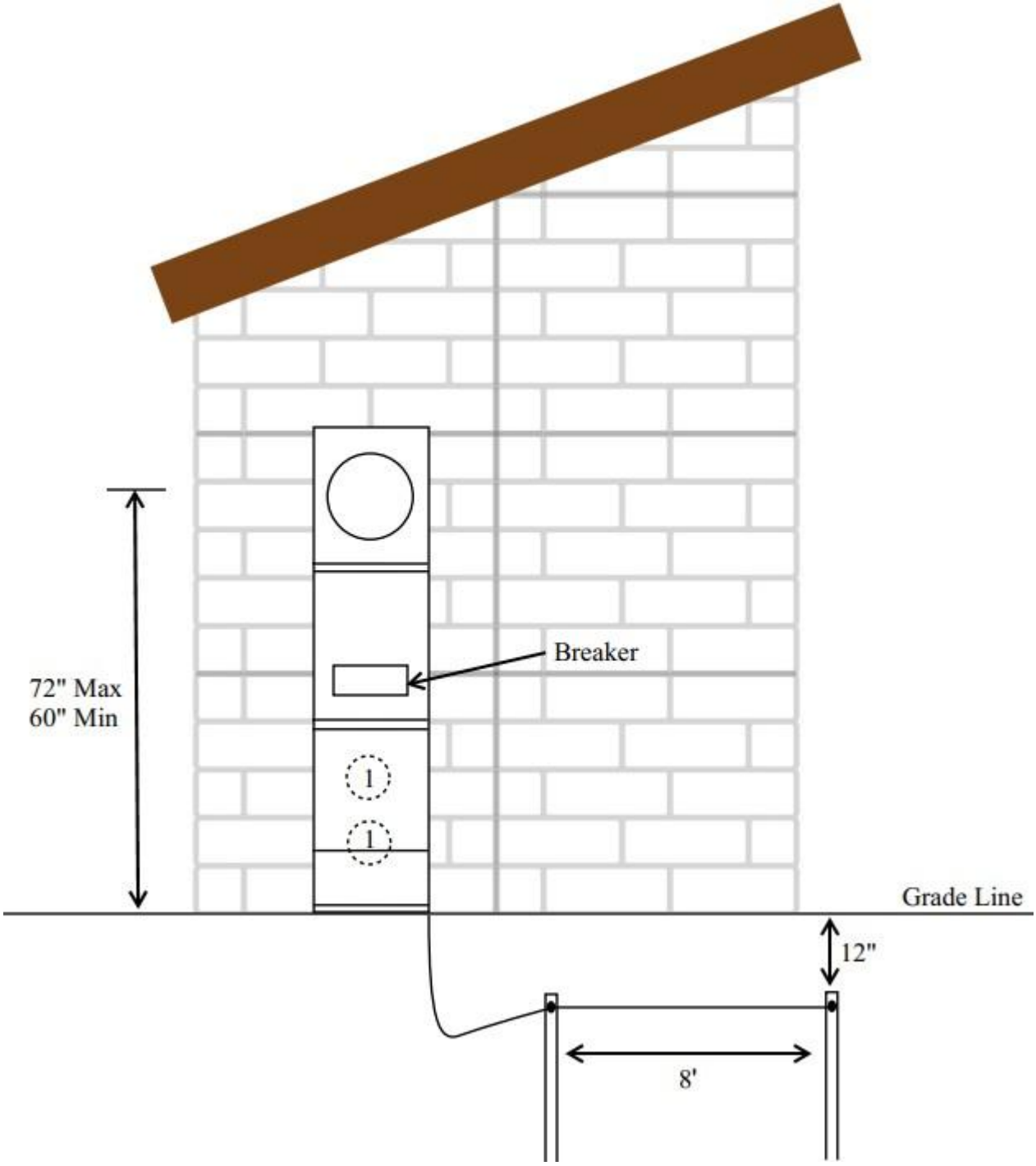

*Image is not to scale

715.339.2155
800.884.0881

W6803 Springs Drive ● PO Box 110
Phillips, WI 54555

www.PriceElectric.coop

PEC – Your Energy Solutions Cooperative

200-Amp Underground Service, Meter/Transfer Switch Combo, Backboard Mount

1. The Cooperative shall furnish and install the line conductors. Where the Cooperative's wires will be covered by concrete or blacktop, the member shall provide conduit to extend at least 3 feet beyond the edge of the concrete or blacktop. Adequate conduit will be determined by the Cooperative and the conduit and trench must be inspected by the Cooperative prior to backfilling. Failure to do so could cause complications associated with the service installation and/or additional expense.
2. The member has the option to purchase a Cooperative-approved 200-amp meter transfer switch combination with main breaker from the Cooperative or independently. If purchased from the Cooperative, the Cooperative will install the meter transfer switch combination, backboard, line side PVC with slip joint, ground rods, approved clamps and grounding electrode conductor at the member's expense. If purchased elsewhere, the member is responsible for installation of the meter transfer switch combination, backboard, line side PVC with slip joint, ground rods, approved clamps and grounding electrode conductor to the Cooperative's specifications.
3. Backboards shall be treated wood posts of 6" x 6" nominal dimension and minimum 5/4 treated decking for backing. Other support structures may be approved by the Cooperative but must have prior approval. Backboards shall be adequately supported to maintain the meter socket in a level and plumb position.
4. 2" minimum Schedule 40 PVC conduit shall extend to a minimum of 18" below finished grade with PVC slip joint installed on the line side of the service installation.
5. Two 5/8" copper clad steel ground rods and approved clamps shall be installed. The top of the rods shall be at least 12" below grade level. Ground rods and grounding conductors shall not be installed in front of the meter base or within 2 feet of the underground cable route. Ground wire shall be minimum 4 AWG copper wire.
6. Wiring shall be installed in compliance with the state electrical code and any local requirements.

715.339.2155
800.884.0881
W6803 Springs Drive ● PO Box 110
Phillips, WI 54555
www.PriceElectric.coop

200-Amp Underground Service, Meter/Transfer Switch Combo, Backboard Mount

715.339.2155
800.884.0881
W6803 Springs Drive ● PO Box 110
Phillips, WI 54555
www.PriceElectric.coop

Price Electric Cooperative

A Touchstone Energy® Cooperative

200-Amp Underground Service, Meter/Transfer Switch Combo, Backboard Mount

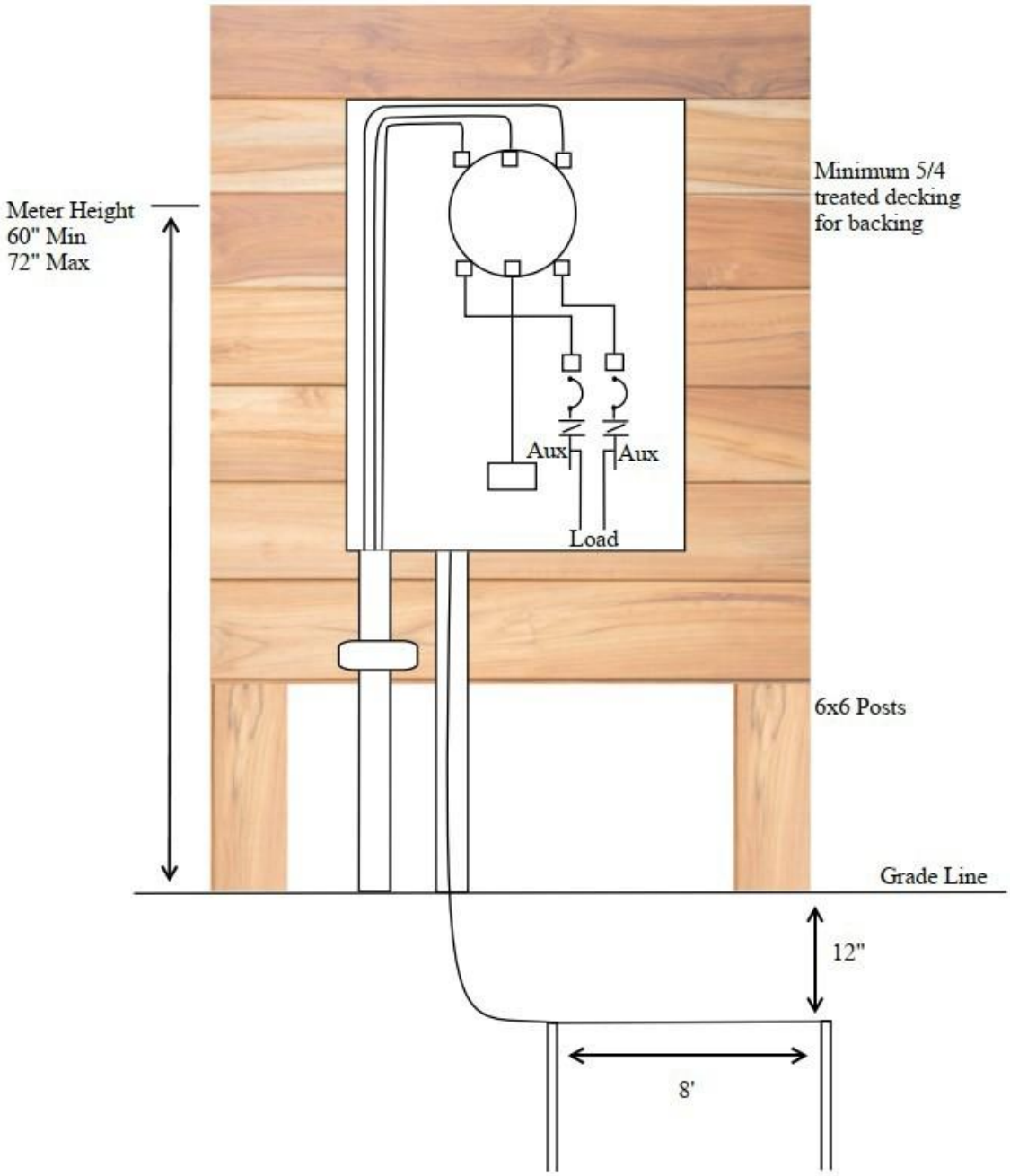

*Image is not to scale

715.339.2155
800.884.0881

W6803 Springs Drive ● PO Box 110
Phillips, WI 54555

www.PriceElectric.coop

PEC – Your Energy Solutions Cooperative

400-600 Amp Single Phase Underground Service

1. Cooperative shall approve and verify current transformers.
2. Cooperative shall furnish and install metering conductors.
3. Cooperative shall furnish and install underground line conductors.
4. If mounted remotely, the member shall furnish and install treated posts and backboard, or other support structure approved by the Cooperative. Treated wood posts of 6" x 6" nominal dimension and treated 5/4 decking for backing, 4'x4' will meet minimum requirements.
5. Member shall furnish and install a Cooperative approved current transformer enclosure and all connecting conduit. (See "Approved Equipment List")
6. Member shall furnish and install 2 ½" minimum Schedule 40 PVC conduit to extend a minimum of 18" below finished grade with PVC slip joint installed on the line side of the service installation.
7. Member shall furnish and install load conductors and supply lugs for meter base.
8. Member shall furnish and install grounding conductor and conduit.
9. Member shall furnish and install two 5/8" copper clad steel ground rods and approved clamps. The top of the rods shall be at least 12" below grade level. Ground rods and grounding conductors shall not be installed in front of the meter base or within 2 feet of the underground cable route. Ground wire shall be minimum 2 AWG copper wire.
10. Member shall furnish and install the ground wire jumper conductor from the neutral busbar to the enclosure itself with approved bonding clamps and minimum of 2/0 copper-stranded conductor.
11. Wiring shall be installed in compliance with the state electrical code and any local requirements.

715.339.2155
800.884.0881
W6803 Springs Drive ● PO Box 110
Phillips, WI 54555
www.PriceElectric.coop

400-Amp Single Phase Underground

715.339.2155
800.884.0881

W6803 Springs Drive ● PO Box 110
Phillips, WI 54555

www.PriceElectric.coop

Price Electric Cooperative

A Touchstone Energy® Cooperative

400-Amp Single Phase Underground Service

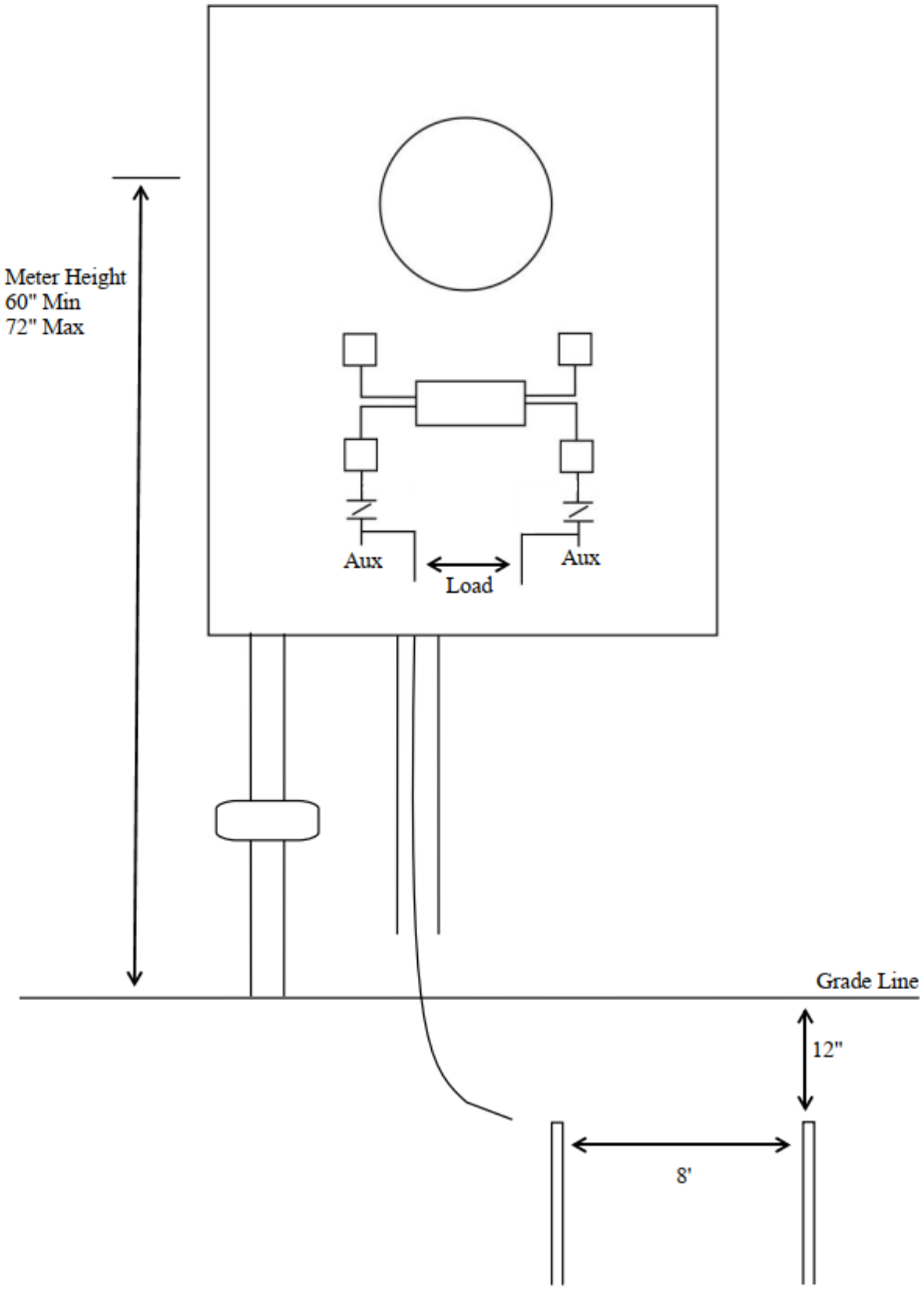

*Image is not to scale

715.339.2155
800.884.0881

W6803 Springs Drive ● PO Box 110
Phillips, WI 54555

www.PriceElectric.coop

PEC – Your Energy Solutions Cooperative

Price Electric Cooperative

A Touchstone Energy® Cooperative

600-Amp Single Phase Underground Service

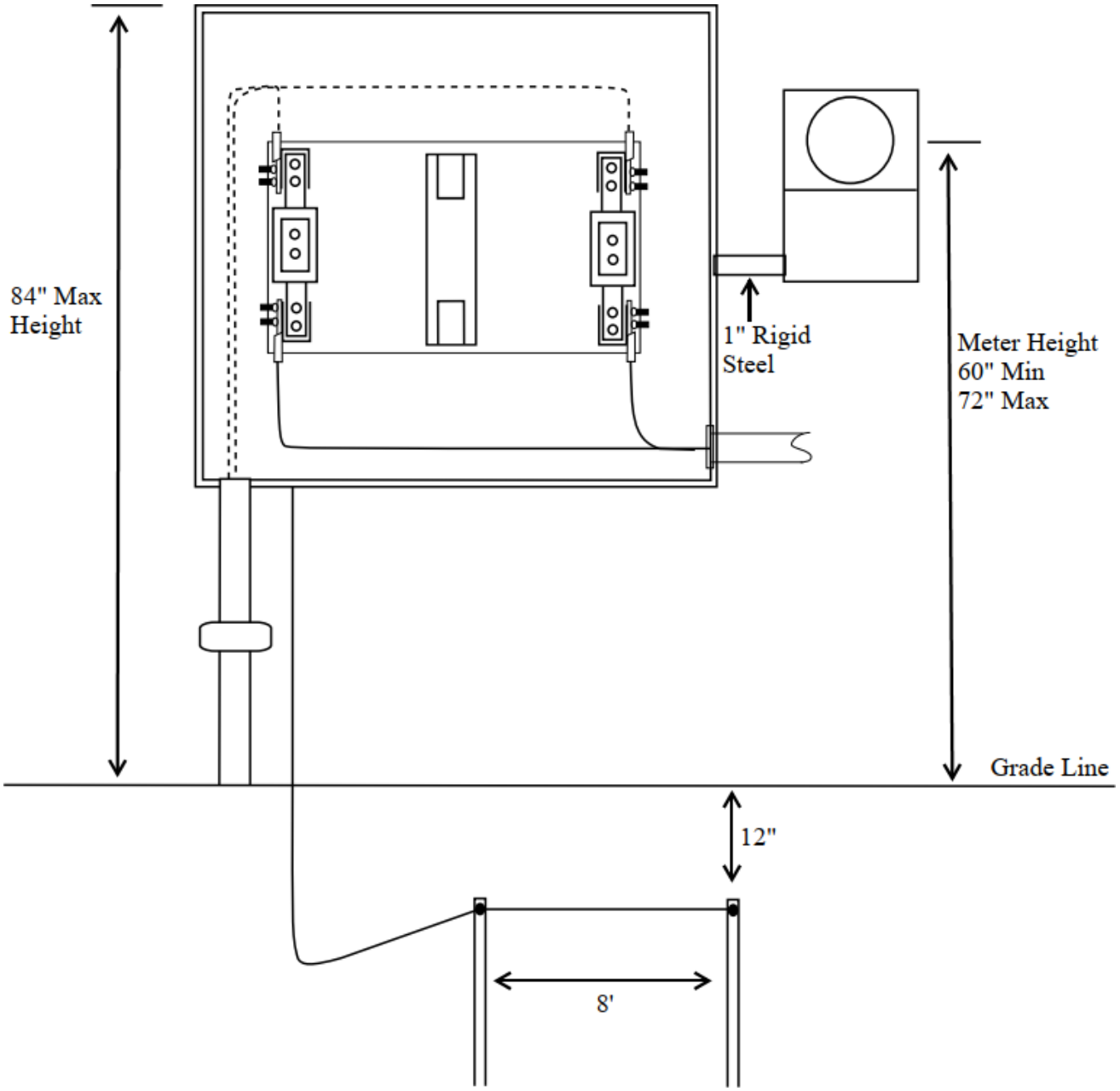

*Image is not to scale

715.339.2155
800.884.0881

W6803 Springs Drive ● PO Box 110
Phillips, WI 54555

www.PriceElectric.coop

PEC – Your Energy Solutions Cooperative

Price Electric Cooperative

A Touchstone Energy® Cooperative

600-Amp Single Phase Underground Service

715.339.2155
800.884.0881

W6803 Springs Drive ● PO Box 110
Phillips, WI 54555

www.PriceElectric.coop

PEC – Your Energy Solutions Cooperative

Price Electric Cooperative
A Touchstone Energy® Cooperative

400 Amp & Above Three-Phase Underground Service

1. The Cooperative shall furnish and install current transformers.
2. Cooperative shall furnish and install underground line conductors.
3. Member shall furnish and install a Cooperative approved current transformer enclosure and all connecting conduit.
4. Member shall furnish and install 3" minimum Schedule 80 PVC conduit to extend a minimum of 18" below finished grade with PVC slip joint installed on the line side of the service installation.
5. Member shall furnish and install line and load conductors and connectors.
6. Member shall furnish and install grounding conductor and conduit.
7. Member shall furnish and install two 5/8" x 8'copperclad steel ground rods with approved clamps. Ground rods and grounding conductors shall not be installed in front of the meter base or within 2 feet of the underground cable route. The top of rods should be at least 12" below grade level. Ground wire shall be minimum 2 AWG copper wire.
8. Member shall furnish and install the ground wire jumper conductor from the neutral busbar to the enclosure itself with approved bonding clamps and a minimum of 2/0 copper-stranded conductor.
9. Cooperative shall furnish and install, at the member's expense, the meter base with test switches per the "Approved Equipment List".
10. Wiring shall be installed in compliance with the state electrical code and any local requirements.

715.339.2155
800.884.0881
W6803 Springs Drive ● PO Box 110
Phillips, WI 54555
www.PriceElectric.coop

400 Amp & Above Three-Phase Underground Service

715.339.2155
800.884.0881

W6803 Springs Drive ● PO Box 110
Phillips, WI 54555

www.PriceElectric.coop

Price Electric Cooperative

A Touchstone Energy® Cooperative

400 Amp & Above Three-Phase Underground Service

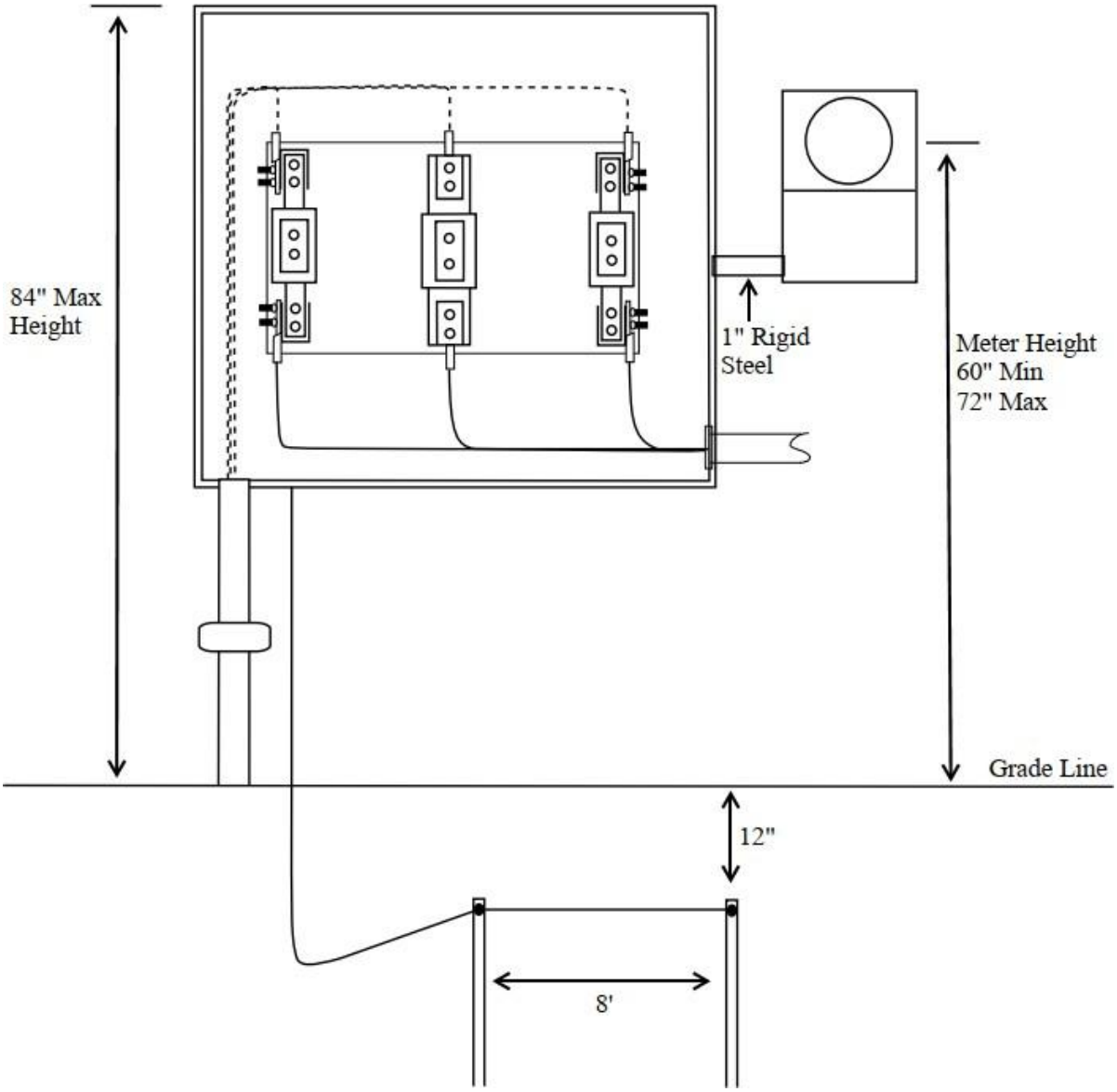

*Image is not to scale.

715.339.2155
800.884.0881

W6803 Springs Drive ● PO Box 110
Phillips, WI 54555

www.PriceElectric.coop

PEC – Your Energy Solutions Cooperative

Section 7—Member Generating Equipment

Standby Generating Equipment

The Cooperative shall be consulted before any generating equipment is connected to any circuits which are or may be supplied from the Cooperative's service lines. The member shall install an approved double pole / double throw (transfer) switch that is mechanically interlocked– (of adequate current and voltage rating) so that the connected member's generating equipment cannot energize the Cooperative's supply lines.

The double pole / double-throw (transfer) switch may be manually or automatically operated. Member-owned generating equipment shall not operate in parallel with the Cooperative's system except under specific contract with the Cooperative covering the conditions of such operation.

Distributed Generation System, Alternate Power and/or Parallel Generation

A parallel generation system allows the transfer of electrical energy from the member's generator in the Cooperative's distribution system. Consult the Cooperative regarding the requirements of this service.

715.339.2155
800.884.0881
W6803 Springs Drive ● PO Box 110
Phillips, WI 54555
www.PriceElectric.coop

Price Electric Cooperative

A Touchstone Energy® Cooperative

Dual Fuel Installations

To qualify for the electric heating reduced rate, the member must have an electric heat source with a demand of at least 5 KW. This minimum is not for existing members on the dual fuel program, only new dual fuel installations. It is highly recommended that the member also has a backup, non-electric, heat source that can be run when electric heating is controlled (turned off).

All electric heat sources at a reduced rate must be controlled.

By entering the dual fuel heat program, you agree to allow PEC to control (turn off) your electric heating systems during periods of peak demand. It is at these times you would rely on your back up heat source.

In return for allowing PEC to control your electric heat, the member will receive a reduced rate for the electricity consumed by the electric heat source.

PEC will install a load management receiver (LMR) near the member-installed meter socket. The LMR is used to control the electric heat systems. This device is approximately 6" by 12". During a period of peak demand, a signal is sent to the LMR, which controls the load for a pre-determined period of time. LMR must be on the exterior of a building, accessible by PEC employees at all times from ground level.

A $5.00 per month meter charge is applied to all secondary meters, including the secondary heat meter used for the dual fuel rate. This meter must be located on the exterior of a building or meter pedestal, accessible by PEC employees at all times from ground level. Rates are subject to change without notice at any time, please refer to the PEC website for current rates.

All members on the dual fuel heat program must complete and sign the load management agreement.

Qualifying systems include baseboard, electric thermal storage, plenum heater, cove heater, electric boiler, radiant in floor heat, geothermal heat pump (regular rate will be charged in the summer), and mounted garage heaters.

Notes:

Air source heat pumps for heating and air conditioning are not eligible for the electric heating rates or load management program. PEC does have advantageous rebates available for air source heat pumps.

No air conditioning is eligible for reduced rates.

For more information on the dual fuel program, please refer to the Load Management Guidelines Book that can be found on the PEC website or available in print upon request.

715.339.2155
800.884.0881

W6803 Springs Drive ● PO Box 110
Phillips, WI 54555

www.PriceElectric.coop

715.339.2155
800.884.0881

W6803 Springs Drive ● PO Box 110
Phillips, WI 54555

www.PriceElectric.coop

Price Electric Cooperative
A Touchstone Energy® Cooperative

Approved Equipment List

200 Amp Singe Phase Freestanding Pedestal

- Milbank U5136-0-200S-10GR-WI (Single Meter Socket)
- Milbank U5137-0-200S-10GR-WI (Dual Meter Socket)
- Durham 1010706 200-amp Underground Meter socket Pedestal
- Building--Milbank U6689-O-200-KK
- Building--Milbank U5706-O-200S-KK
- Building--Milbank U5925-O-200-KK

320 Amp Single Phase Freestanding Pedestal

- Durham 1009282 Pre-wired; Durham 1009922, 12" extension; Durham ARP01066
- Durham 1011966 320-amp Underground Meter Socket Pedestal
- Building--Milbank U3849-O-2/200
- Building--Milbank U1748-O-WI

Current Transformer Enclosure

- EMI (Electro-Mechanical Industries) CTB-380M (800 amperes) *
- Milbank U5990 (800 amperes) *

*Metering current transformer mounts will be specified by the Cooperative depending on ampere rating and service type.

<u>Meter Sockets</u>

4 Terminal 200 Amp w/load center

- Milbank U5871-XL-200-K1 (lever bypass)
- Milbank U4322-O-5T9 200 Amp
- Milbank R5168-XTL-200-KK
- Multi service 4 position U5884-X-KK-K16 position U5886-X-KK-K1
- Eaton Type CH CMBX1212B200BTS

5 Terminal 320 Amp

- Milbank U5059-X-2/200-K3L
- MilbankU5894-X-2/200
- MilbankU5893-X-2/200
- Milbank U2448-X NOTE: add connector size #6-350; requires a disconnect after the base

5 Terminal 400 Amp Single Phase

- Ronk 7406MS-X (Extra deep/wide w/ DPDT switch for generator use)

715.339.2155
800.884.0881
W6803 Springs Drive ● PO Box 110
Phillips, WI 54555
www.PriceElectric.coop

6 Terminal

- Talon 9804-8544
- Milbank U4490-XL

7 Terminal Three Phase w/bypass

- Milbank U9761-RRL

13 Terminal 20 Amp w/test switches

- Milbank UC7445-XL-TS100109
- Durham ASTS 13-1C480

Multiple Position Sockets

4 Terminal 200 Amp per position/2 positions

- Milbank U1252-X

*Contact Price Electric for clarification or standards for meter sockets mentioned or possibly not mentioned.

715.339.2155
800.884.0881
W6803 Springs Drive ● PO Box 110
Phillips, WI 54555
www.PriceElectric.coop

Price Electric Cooperative

A Touchstone Energy® Cooperative

New Service Membership Terms

- A Membership Application for each new service must be on file prior to connection of service.
- All service extensions require that electric service shall continue in force for five (5) years from the date service is made available by the Cooperative. If the applicant discontinues service for any reason, including but not limited to sale or other conveyance of the service location, the applicant will be responsible for continued payment of monthly service availability fees for the remainder of the five (5) year term unless and until service is continued at the same service location by a new member, provided said member agrees to assume responsibility for the remainder of the term.
- All service extensions will terminate at a meter base or pedestal. A Cooperative representative will assist the member in determining the type of construction and the location for the point of service. No service will be connected without a means of disconnect.
- The applicant is responsible for providing proof of title to the Cooperative for each property that requires a right of way easement. Title instruments including deeds must be on file at the Cooperative. Copies of deeds are available from the Register of Deeds in the county where the property is located.
- The applicant will be responsible for all necessary permits, permit fees, and must clear the rights of way according to Cooperative specifications. The applicant will be responsible for any restorations on any properties accessed via the right of way easement.
- Estimated construction costs must be paid in advance and construction completed within twelve (12) months following payment. After construction, a billing adjustment will be made to reflect the actual expenses of the job.
- Accounts may be subject to a security deposit based on an Online Utility credit check. The security deposit must be paid before the service will be connected.
- If another member or members connect to the extension within five (5) years of the date the service was originally connected, the original member will be reimbursed proportionately for the aid to construction fee as long as ownership of the property for which the fee was paid is retained.
- Upon installation of the new service, the Cooperative shall begin billing the monthly service availability charge.

If you authorize a contractor or other personal representative to act on your behalf during the new service process, please list their information below.

Name: _____Phone Number: _____

Applicant Signature: _____Date: _____

Print Name: _____

Applicant Signature (if applicable): _____Date: _____

Print Name: _____

715.339.2155
800.884.0881

W6803 Springs Drive ● PO Box 110
Phillips, WI 54555

www.PriceElectric.coop

PEC – Your Energy Solutions Cooperative

Price Electric Cooperative

A Touchstone Energy® Cooperative

New Service Checklist

Thank you for your interest in a new service with Price Electric Cooperative (PEC). Please refer to this checklist as a guide as you go through the construction process.

To initiate the process, return the following:

_____Completed Membership Application

_____Signed Membership Terms

_____Payment of $500.00 non-refundable staking fee

After the membership terms, application, and staking fee are received, PEC personnel will schedule a time to perform a service extension assessment. Please notify us if you would like to be present. After the assessment is complete, an estimate for construction, easement requirements, a wiring compliance statement, and any additional permit requirements will be mailed to you.

To continue the process after the assessment, return the following:

_____Payment for estimated construction costs

_____Warranty Deed for the property where the new service will be installed (can be returned at any time)

_____Warranty Deeds from neighboring properties (if applicable)

_____Wiring Compliance Statement (signed & notarized, if applicable)

_____Construction permits and inspection sign-off (if applicable)

Other items to be completed prior to construction:

_____Right-of-way cleared (applicant responsible for clearing all needed rights-of-way)

_____Location of applicant-owned facilities such as propane, septic, etc. (if applicable, applicant responsibility)

_____Ensure easement for your property has been received by PEC

_____Ensure easements from neighboring properties have been received by PEC (if applicable)

*Please note that a credit and identity check is completed by an independent third party on all new applicants. A deposit may be required based on the results. You will be notified if a deposit is required. Deposits must be paid prior to energizing the service.

Welcome to Price Electric Cooperative and please contact us if you have any questions.

715.339.2155
800.884.0881

W6803 Springs Drive ● PO Box 110
Phillips, WI 54555

www.PriceElectric.coop

Glossary

A

AC: The abbreviation for alternating current.

ACCESS, ACCESSIBLE: "Access" means capability of being reached quickly for operating, reading, repairing, removing, testing, inspecting, or installing meters, transformers, switches, conductors, electrical enclosures, and related equipment without requiring those for whom access is required to climb over or remove obstacles, to unlock doors, to dismantle fences or gates, and so forth. Accessible equipment is not guarded by architectural enhancements, dogs, elevation, locks, parked vehicles, structures, or other impediments.

ACCESS OPENING: The minimum opening of a pull section or termination enclosure required for utility work access. This opening is measured from the edge of flange to the edge of flange, not from sidewall to sidewall.

AMPACITY: The current expressed in amperes that an electric conductor can carry continuously under specified conditions of use without exceeding its temperature rating.

AMPERE (Amp): The practical unit of electric current. One (1) ampere is the current caused to flow through a resistance of one (1) ohm by one (1) volt.

APPROVED: As used in these requirements, the term "approved" means authorized, sanctioned, permitted, or specified by the Utility. In most cases, the approval will be in written or published form.

AUTOMATIC BYPASS: A device within a meter socket that automatically operates upon removal of the meter from the socket allowing current to flow from the Utility's (line-side) socket clips to the member's(load-side) socket clips with the meter removed from the socket.

AWG: American Wire Gauge, a term used to measure wire size.

B

BONDING (BONDED): The permanent joining of metallic parts to form an electrically conductive path which will assure electrical continuity and the capacity to conduct safely any current likely to be imposed.

BREAKER: Member's circuit breaker. See CIRCUIT BREAKER.

BUSHINGS: Plastic or nylon rings that attach to the ends of conduit to protect the electrical cable from sharp edges.

BYPASS: A device which shunts current around the meter socket so the meter can be removed without interrupting service to the member. Also see TEST-BLOCK BYPASS.

715.339.2155
800.884.0881
W6803 Springs Drive ● PO Box 110
Phillips, WI 54555
www.PriceElectric.coop

C

CIRCUIT BREAKER: A device designed to open and close a circuit by non-automatic means and to open the circuit automatically on a predetermined over-current without damage to itself when properly applied within its rating.

CONDUCTORS, LINE-SIDE (SUPPLY-SIDE): See CONDUCTORS, UN-METERED.

CONDUCTORS, LOAD-SIDE: See CONDUCTORS, METERED.CONDUCTORS, METERED: Conductors transmitting electrical energy that has been

previously recorded by the Utility's billing meter.

CONDUCTORS, UN-METERED: Conductors transmitting electrical energy that has not been recorded by the Utility's billing meter.

CONDUIT: A listed or approved pipe with a smooth interior surface to permit easy drawing in of electrical conductors.

CONDUIT, RIGID: Rigid (heavy wall) galvanized conduit. Electrical metallic tubing (EMT) doesn't qualify as rigid conduit.

CONTINUOUS LOAD: A load where the maximum current is expected to continue for three hours or more.

CT: An acronym for Current Transformer. The term CT and the phrase "Current Transformer" are synonymous terms. See CURRENT TRANSFORMER.

CURRENT: See AMPERE.

CURRENT TRANSFORMER: An instrument transformer designed for the measurement of current. It is used to reduce primary current by a known ratio to within the range of a transformer rated kilowatt hour meter. Current transformers are often referred to by the acronym CT.

D

DISCONNECT DEVICE: A device whereby the conductors of a circuit can be disconnected from their source of supply (IEEE 100-1984).

DISCONNECTING MEANS: A device or group of devices or other means by which the conductors of a circuit can be disconnected from their source of supply.

DRIP LOOP: A downward loop in the member's conductors adjacent to the Utility's conductors to prevent water from entering the service mast at the weather head.

715.339.2155
800.884.0881
W6803 Springs Drive ● PO Box 110
Phillips, WI 54555
www.PriceElectric.coop

E

ELECTRODE: A solid electric conductor through which an electric current enters or leaves. As used in this book, the term refers to a grounding electrode. See GROUNDING ELECTRODE.

ENCLOSURE: Box-like structure designed to enclose and protect utility service conductors or equipment.

G

GROUND: A conducting connection, whether intentional or accidental, between an electric circuit or equipment and earth.

GROUNDED: As used in this book, it means intentionally connected to earth through a ground connection or connections of sufficiently low impedance and having sufficient current-carrying capacity to prevent the buildup of voltages that may result in undue hazards to connected equipment or to persons.

GROUNDING CONDUCTOR: A conductor used to connect any equipment device, or wiring system, with a grounding electrode or electrodes.

GROUNDING ELECTRODE: A conductor embedded in the earth, used for maintaining ground potential on conductors connected to it and for dissipating current conducted to it into the earth.

GROUNDING LUG: A lug designed for terminating the member's grounding wire.

GUYING: Cables or braces used to relieve the strain of overhead conductors on masts and poles.

I

INSTRUMENT TRANSFORMER: A transformer that reproduces in its secondary circuit a definite and known ratio of the current or voltage of its primary circuit, with the phase relationship substantially preserved.

L

LINE-SIDE CONDUCTOR: A service conductor delivering electrical power to the member which has not been recorded by the Cooperative's meter.

LOAD-SIDE CONDUCTOR: Any conductor delivering electrical power to the member which has been recorded by the Cooperative's meter.

LOCKABLE: Accepting a padlock with a shackle diameter of five-sixteenths (5/16) inch.

LUGS: Used to terminate cable conductors on termination facilities.

M

MAIN SERVICE DISCONNECT: A circuit breaker, fused switch, or other approved disconnecting means installed on the supply (line) side of an installation.

715.339.2155
800.884.0881
W6803 Springs Drive ● PO Box 110
Phillips, WI 54555
www.PriceElectric.coop

MEMBER: Any person, persons, corporation, etc. or their designated representative, for whom the electric service and meter installation is provided.

METER DISCONNECT: A circuit breaker, fused switch, or other approved service disconnecting means with overcurrent protection that controls all of, and only the energy registered by its related meter.

METER HEIGHT: Meter height is the distance measured from the center axis of the installed meter to the standing surface immediately in front of the meter.

METER JAW: A spring-loaded receptacle inside a meter socket which captures the terminals (blades) of a meter and connects the meter terminals to the service conductors.

METER PANEL: Panel used exclusively for mounting meter sockets and associated equipment.

METER PEDESTAL: Free standing meter enclosure, typically used for commercial applications.

METER SOCKET: The mounting device consisting of meter jaws, connectors, and enclosure for accommodating socket-type meters.

MULTIPLE METERING: Prefabricated service entrance equipment consisting of a service termination section and two or more meter sockets.

N

NEC: The most recent State adopted publication of the National Electrical Code.

NEMA: National Electrical Manufacturers Association

NESC: The most recent State adopted publication of the National Electrical Safety Code

P

PLUMB: In this case referring to the meter socket enclosure. To have the sides and front of the meter socket enclosure perfectly vertical from both the front and side views.

POINT OF SERVICE: The point where the load or member's conductors meet the Cooperative's electric power system (point of ownership change).

PRIMARY: Service voltage greater than 600 volts.

R

RACEWAY: An enclosed channel designed expressly for holding wire, cables or bus bars. If designated for line-side conductors, it shall be sealable. The intermixing of line-side and load-side conductors in the same raceway is not permitted.

715.339.2155
800.884.0881
W6803 Springs Drive ● PO Box 110
Phillips, WI 54555
www.PriceElectric.coop

S

SECONDARY: Service voltage less than 600 volts.

SERVICE: Electric service from the Utility's electric distribution system to the electrical equipment of the member's facilities.

SERVICE DISCONNECT: A circuit breaker, fused switch, or other approved disconnecting means by which the service conductors can be disconnected from the utility source of supply.

SERVICE EQUIPMENT: As used in this book, the term "service equipment" refers to meter sockets, meter socket enclosures, meter panels, multi-meter panels, service conductor termination compartments, pull boxes for service conductors, pull sections for service conductors, CT cabinets, CT compartments of switchboards, bus spacers, service disconnects, meter disconnects, main service disconnects, grounding electrodes, grounding electrode conductors, and any other equipment or enclosures related to the supply and metering of electric service from the Utility's system to a member's premises. For the purposes of this book, the terms "service equipment" and "service entrance equipment" are synonymous terms.

SWITCH: A device for making, breaking, or changing the connections in an electric circuit.

T

TEST SWITCH: An arrangement of small knife switches connected in the secondary current transformer circuit between the instrument transformers and associated meters and metering devices. The test switch is used by the Utility to isolate the metering from the instrument transformers. Also referred to as a meter test switch.

U

UL: Underwriters Laboratory.

V

VOLT: The practical unit of electromotive force, or potential difference. One volt will cause one ampere to flow when impressed across a one-ohm resistor.

VOLTAGE TRANSFORMER (VT): An instrument transformer designed for the measurement of voltage. It is used to reduce primary voltage by a known ratio to within the range of a transformer rated kilowatt hour meter.

715.339.2155
800.884.0881
W6803 Springs Drive ● PO Box 110
Phillips, WI 54555
www.PriceElectric.coop